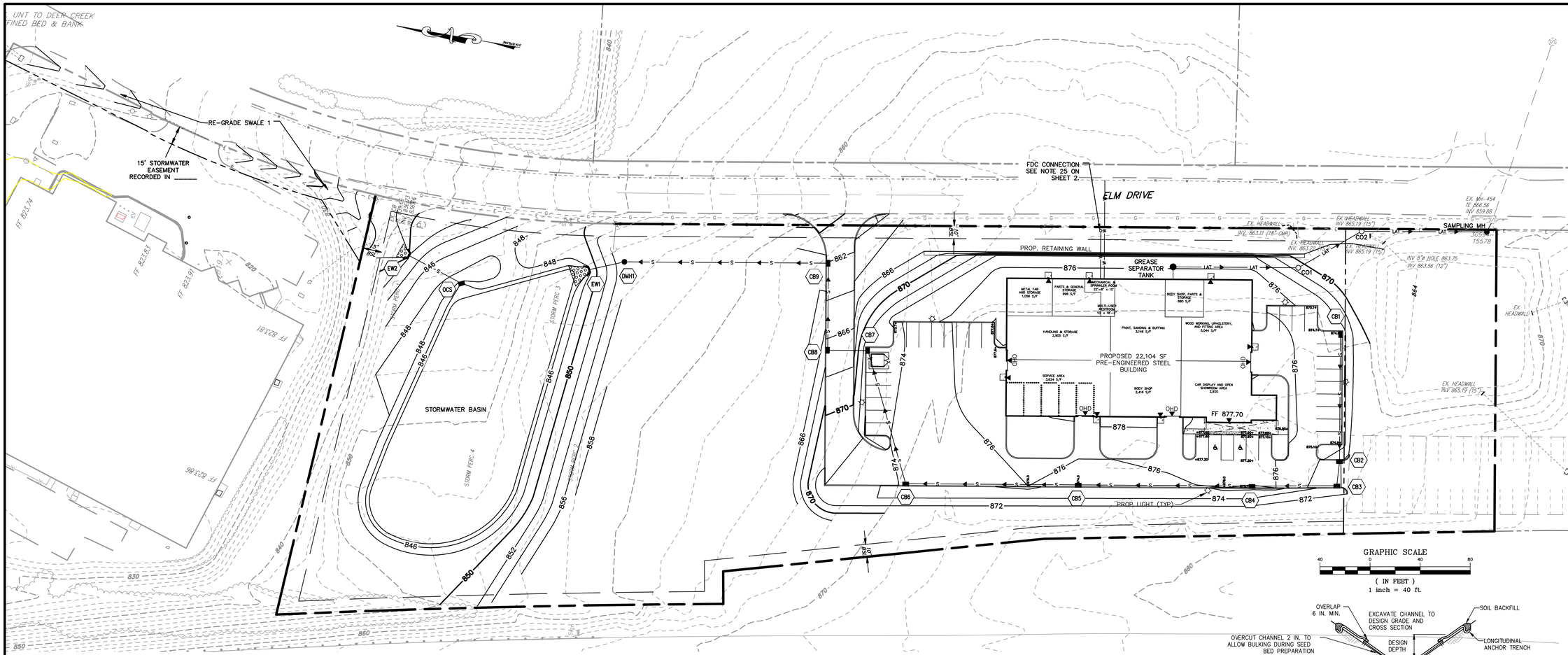

LEGEND

- EX. PROPERTY LINE
- EX. RIGHT-OF-WAY
- EX. EASEMENT
- EX. MUNICIPAL BOUNDARY
- EX. ZONING BOUNDARY
- EX. STRUCTURE (HOUSE, GARAGE, ETC.)
- EX. FENCE
- EX. INDEX CONTOUR (1' INTERVAL)
- EX. STORM SEWER (MANHOLE/CATCH BASIN)
- EX. SANITARY SEWER (MANHOLE)
- EX. ELECTRIC SERVICE & UTILITY POLE
- EX. ELECTRIC & TELEPHONE SERVICE
- EX. WATER SERVICE
- EX. FIRE HYDRANT
- EX. WATER VALVES
- EX. GAS SERVICE
- EX. SOILS BOUNDARY
- PROP. STRUCTURE
- PROP. FENCE
- PROP. INDEX CONTOUR (1' INTERVAL)
- PROP. STORM SEWER (MANHOLE/CATCH BASIN)
- PROP. SANITARY LATERAL
- PROP. WATER SERVICE

INLET	TO	INLET	TOP (FT)	INV. IN (FT)	INV. OUT (FT)	HORZ LEN. (FT)	SLOPE (%)	SIZE (IN)	TYPE	N FACTOR	INLET TOP
1	-	2	874.00	-	871.00	102	1.96	15	SLPP	0.012	C 2x4
2	-	3	872.00	869.00	868.90	19	1.00	15	SLPP	0.012	C 2x4
3	-	4	872.25	868.71	868.61	68	1.00	15	SLPP	0.012	C 2x4
4	-	5	875.78	867.93	867.83	139	1.00	15	SLPP	0.012	C 2x4
5	-	6	874.00	866.44	866.34	138	1.30	15	SLPP	0.012	C 2x4
6	-	7	874.11	864.55	864.45	111	1.60	15	SLPP	0.012	C 2x4
7	-	8	872.50	862.68	862.58	32	2.20	15	SLPP	0.012	C 2x4
8	-	9	866.62	861.87	861.77	70	3.98	15	SLPP	0.012	C 2x4
9	-	DMH1	862.07	859.00	858.90	163	6.22	15	SLPP	0.012	C 2x4
DMH1	-	EW1	854.77	848.77	846.79	29	2.75	15	SLPP	0.012	DMH

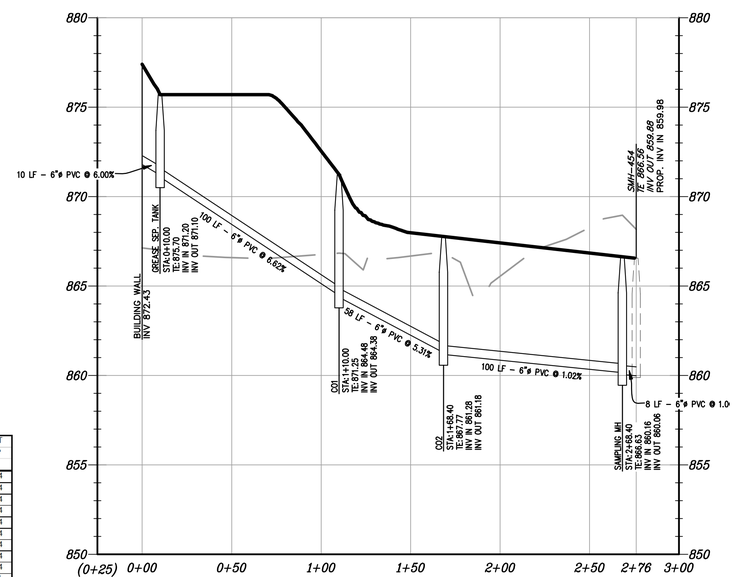

SANITARY SEWER LATERAL – PROFILE

HORIZ. SCALE: 1" = 40'
VERT. SCALE: 1" = 4'

SHREWSBURY BOROUGH MUNICIPAL AUTHORITY NOTES

1. A SEWER PERMIT MUST BE OBTAINED FROM SHREWSBURY BOROUGH MUNICIPAL AUTHORITY.
2. TWO EDU'S ARE ALLOCATED FOR THIS PROJECT.
3. THE LATERAL CONNECTION INTO EXISTING MANHOLE 454 SHALL INCLUDE THE CONSTRUCTION OF A FLOW CHANNEL THAT SHALL NOT INTERFERE WITH THE EXISTING LADDER RUNGS.
4. SANITARY SEWER LATERAL SHALL BE 6" MINIMUM INSIDE DIAMETER.
5. TREES OR SHRUBS SHALL NOT BE PLANTED WITHIN 10 FEET OF THE SANITARY SEWER LATERAL OR WATER SERVICE.
6. ALL SANITARY SEWER MAINS AND LATERALS SHALL MAINTAIN A MINIMUM COVER OF 48 INCHES.
7. ALL WORKMANSHIP AND MATERIALS SHALL COMPLY WITH THE SHREWSBURY BOROUGH MUNICIPAL AUTHORITY SPECIFICATIONS AND RESOLUTIONS.
8. SHREWSBURY BOROUGH MUNICIPAL AUTHORITY AND ITS AUTHORIZED REPRESENTATIVES SHALL HAVE ACCESS TO ALL PROPERTIES FOR THE PURPOSE OF INSPECTION, MAINTENANCE, AND REPAIR RELATED TO ALL FACILITIES OF THE SANITARY SEWER AND WATER SYSTEM.
9. THE PROPOSED SANITARY SEWER LATERAL SHALL BE OWNED AND MAINTAINED BY THE PROPERTY OWNER EXCEPT FOR THE PORTION OF THE LATERAL LOCATED BETWEEN EXISTING MANHOLE 454 AND THE STREET RIGHT-OF-WAY LINE, WHICH SHALL BE OWNED AND MAINTAINED BY THE SHREWSBURY BOROUGH MUNICIPAL AUTHORITY.
10. AS-BUILT DRAWINGS OF THE SANITARY SEWER SYSTEM SHALL BE PROVIDED TO THE AUTHORITY. THE AS-BUILT DRAWINGS SHALL BE ON PA SOUTH STATE PLANE COORDINATE SYSTEM AND NAVD88 DATUM. THE DRAWINGS SHALL BE PROVIDED IN BOTH HARD COPIES AND ELECTRONIC FORMAT COMPATIBLE WITH THE AUTHORITY'S GIS SYSTEM.
11. THE AUTHORITY AND AUTHORITY ENGINEER SHALL BE CONTACTED A MINIMUM OF TWO DAYS PRIOR TO THE PRE-CONSTRUCTION MEETING AND A MINIMUM OF 2 DAYS PRIOR TO THE START OF CONSTRUCTION.
12. DEP PLANNING EXEMPTION CODE # _____ APPROVAL DATE: _____
13. A SEWER PERMIT WILL NOT BE ISSUED UNTIL ALL AUTHORITY FEES ARE PAID IN FULL.

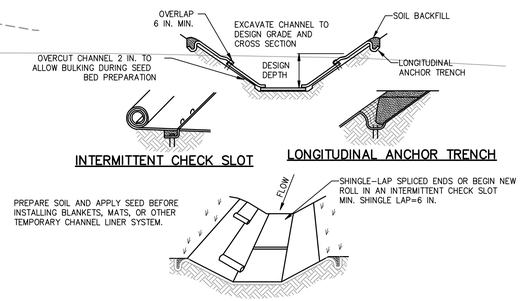

CHANNEL CROSS-SECTION

* SEE MANUFACTURER'S LINING INSTALLATION DETAIL FOR STAPLE PATTERNS, VEGETATIVE STABILIZATION FOR SOIL AMENDMENTS, SEED MIXTURES AND MULCHING INFORMATION

CHANNEL NO.	STATIONS	BOTTOM WIDTH B (FT)	DEPTH D (FT)	TOP WIDTH W (FT)	Z1 (FT)	Z2 (FT)	LINING *
1	ALL	2	1.1	8.6	3	3	GRASS/NAG P300 E STAPLE

NOTES:

ANCHOR TRENCHES SHALL BE INSTALLED AT BEGINNING AND END OF CHANNEL IN THE SAME MANNER AS LONGITUDINAL ANCHOR TRENCHES.

CHANNEL DIMENSIONS SHALL BE CONSTANTLY MAINTAINED. CHANNEL SHALL BE CLEANED WHENEVER TOTAL CHANNEL DEPTH IS REDUCED BY 25% AT ANY LOCATION. SEDIMENT DEPOSITS SHALL BE REMOVED WITHIN 24 HOURS OF DISCOVERY OR AS SOON AS SOIL CONDITIONS PERMIT ACCESS TO CHANNEL WITHOUT FURTHER DAMAGE. DAMAGED LINING SHALL BE REPAIRED OR REPLACED WITHIN 48 HOURS OF DISCOVERY.

NO MORE THAN ONE THIRD OF THE SHOOT (GRASS LEAF) SHALL BE REMOVED IN ANY MOWING. GRASS HEIGHT SHALL BE MAINTAINED BETWEEN 2 AND 3 INCHES UNLESS OTHERWISE SPECIFIED. EXCESS VEGETATION SHALL BE REMOVED FROM PERMANENT CHANNELS TO ENSURE SUFFICIENT CHANNEL CAPACITY.

ALL CHANNELS MUST BE KEPT FREE OF OBSTRUCTIONS SUCH AS FILL GROUND, FALLEN LEAVES & WOODY DEBRIS, ACCUMULATED SEDIMENT, AND CONSTRUCTION MATERIALS/WASTES. CHANNELS SHALL BE KEPT MOWED AND/OR FREE OF ALL WEEDY, BRUSHY, OR WOODY GROWTH. ANY UNDERGROUND UTILITIES RUNNING ACROSS/THROUGH THE CHANNELS SHALL BE IMMEDIATELY BACKFILLED AND THE CHANNELS REPAIRED AND STABILIZED PER THE CHANNEL CROSS-SECTION DETAIL.

VEGETATED CHANNELS SHALL BE CONSTRUCTED FREE OF ROCKS, TREE ROOTS, STUMPS, OR OTHER PROJECTIONS THAT WILL IMPEDE NORMAL CHANNEL FLOW AND/OR PREVENT GOOD LININING TO SOIL CONTACT. THE CHANNEL SHALL BE INITIALLY OVER-EXCAVATED TO ALLOW FOR THE PLACEMENT OF TOPSOIL.

STANDARD CONSTRUCTION DETAIL #6-1
VEGETATED CHANNEL

NOT TO SCALE

BEFORE YOU DIG-DRILL-BLAST
CONTACT:
PA ONECALL SYSTEM
8-1-1 OR 1-800-242-1776

Design Stage Notification
Date: 7/9/18
Serial No. 20181900268

JRH James R. Holley & Associates, Inc.
ENGINEERS • PLANNERS • SURVEYORS
18 South George Street ▲ York, PA 17401
(717) 846-4373 ▲ Fax (717) 843-1568 ▲ Email: jrh@jrholley.com

COMMONWEALTH OF PENNSYLVANIA
JASON M. BRENNEMAN
PROFESSIONAL ENGINEER
No. 075 PENNSYLVANIA

© 2018 James R. Holley & Associates, Inc.

FINAL REVERSE SUBDIVISION & LAND DEVELOPMENT PLAN
FOR
STEEL FARM LAND LLC
GRADING & UTILITY PLAN
SHREWSBURY TOWNSHIP
YORK CO., PA

REVISIONS

NO.	DATE	DESCRIPTION	BY
1	10/15/18	REVISED PER TWP. ENG. REVIEW LETTER 9/27/18	JMB
2	11/12/18	REVISED PER 11/6/18 STAFF REVIEW	JMB
3	12/10/18	NO REVISIONS THIS SHEET	JMB
4	12/17/18	REV. PER BORO AUTH. REVIEW LETTER 12/14/18	JMB

DATE: JULY 31, 2018
SCALE: AS SHOWN
DRAWN BY: JMB
DESIGNED/CK'D BY: JMB
PROJECT NO. 180602
SHEET NO. 4

FILE: \180602 (FRIDAY INVEST)\DWG\CSD\DP\180602D4.DWG